CZ P-09 Airsoft, CO2, Blow Back, Metal Slide, Optic Ready & Threaded Barrel
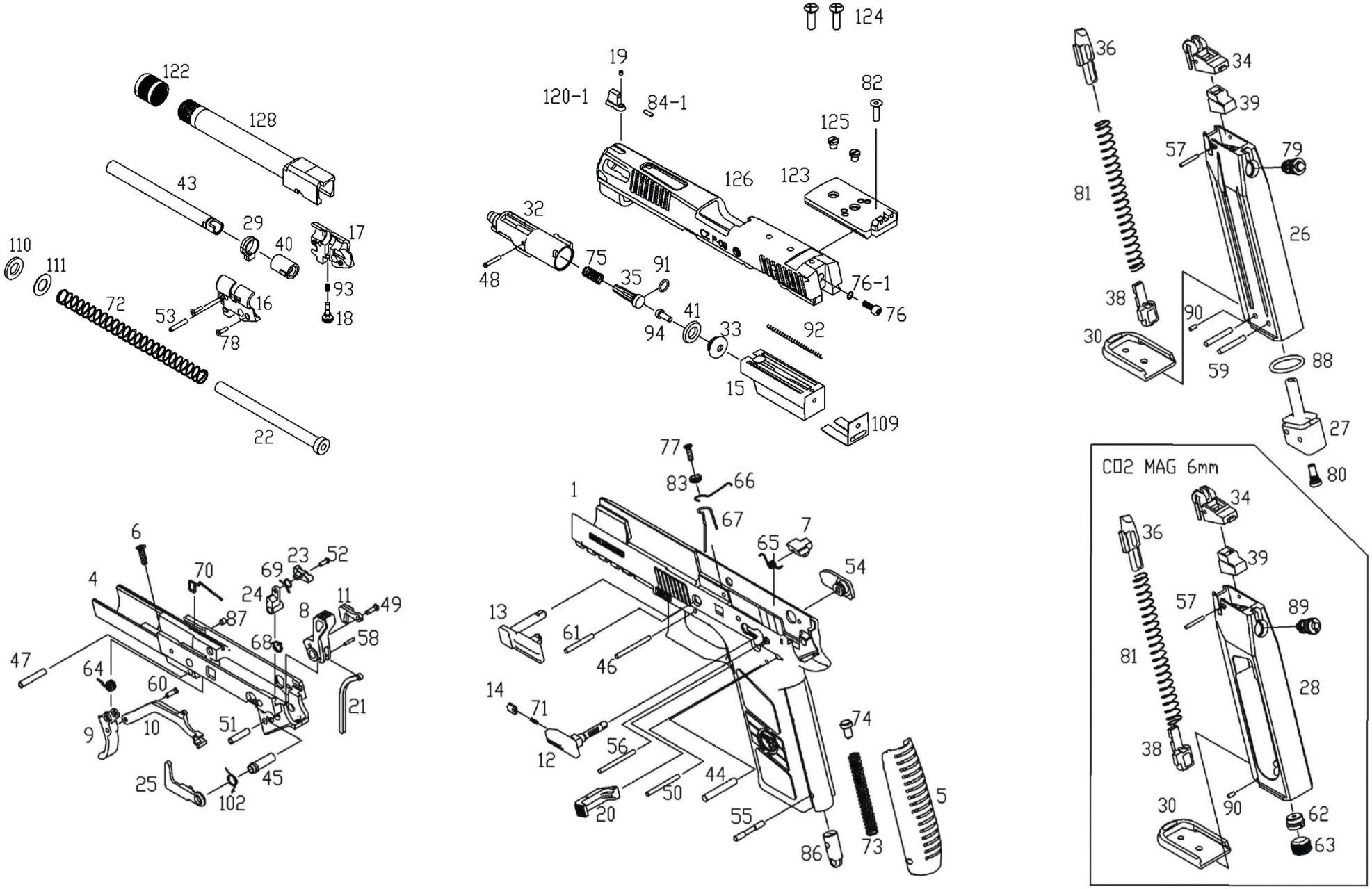
ref. 19600