ASG X9 Airgun, CO2, BB, Full Metal
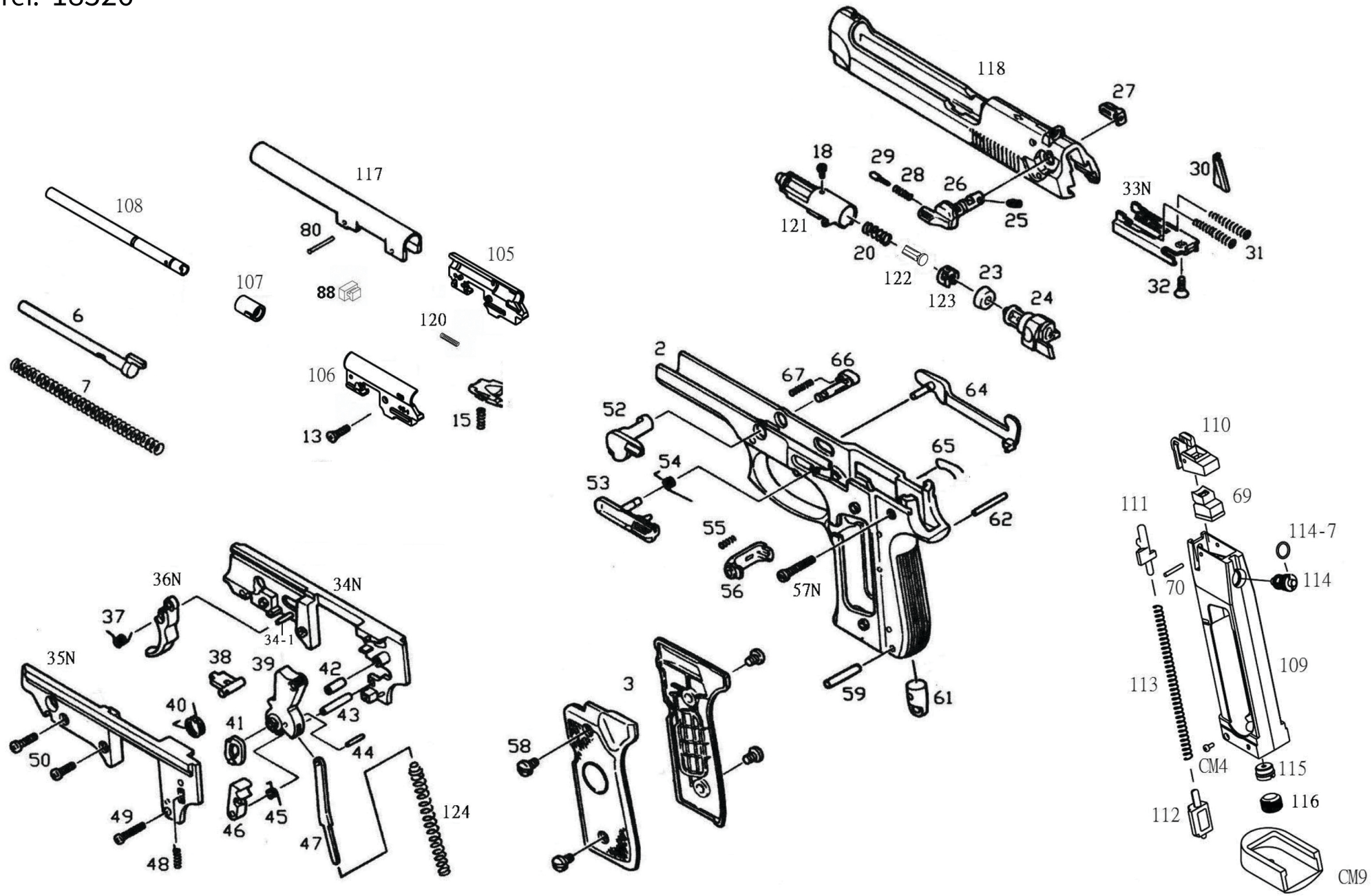
ref. 18526