# CZ Shadow 2 Orange Airsoft, Special Edition
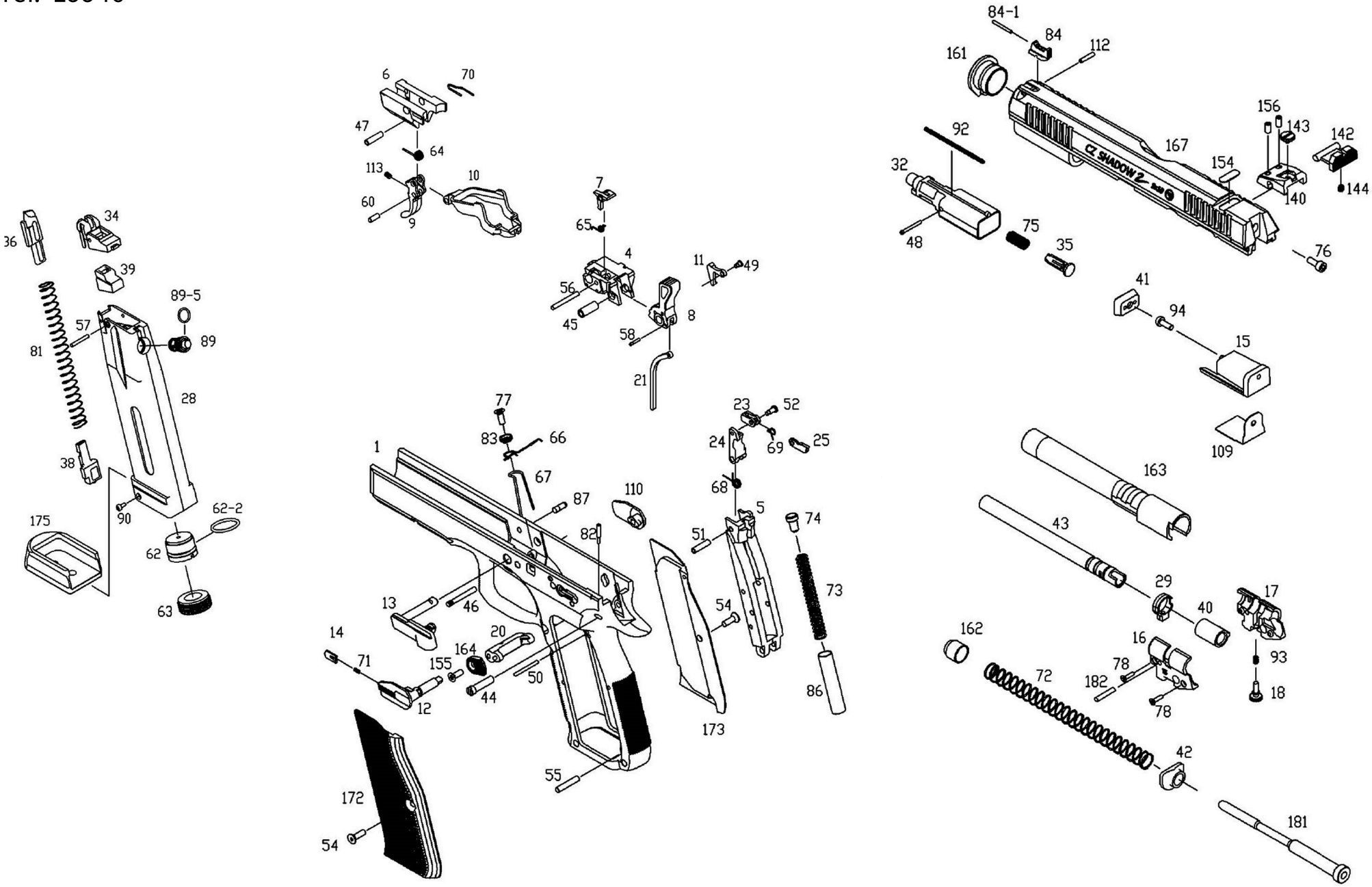
ref. 19946